DRG. No.	K12GD001/0
DRG. REF.	

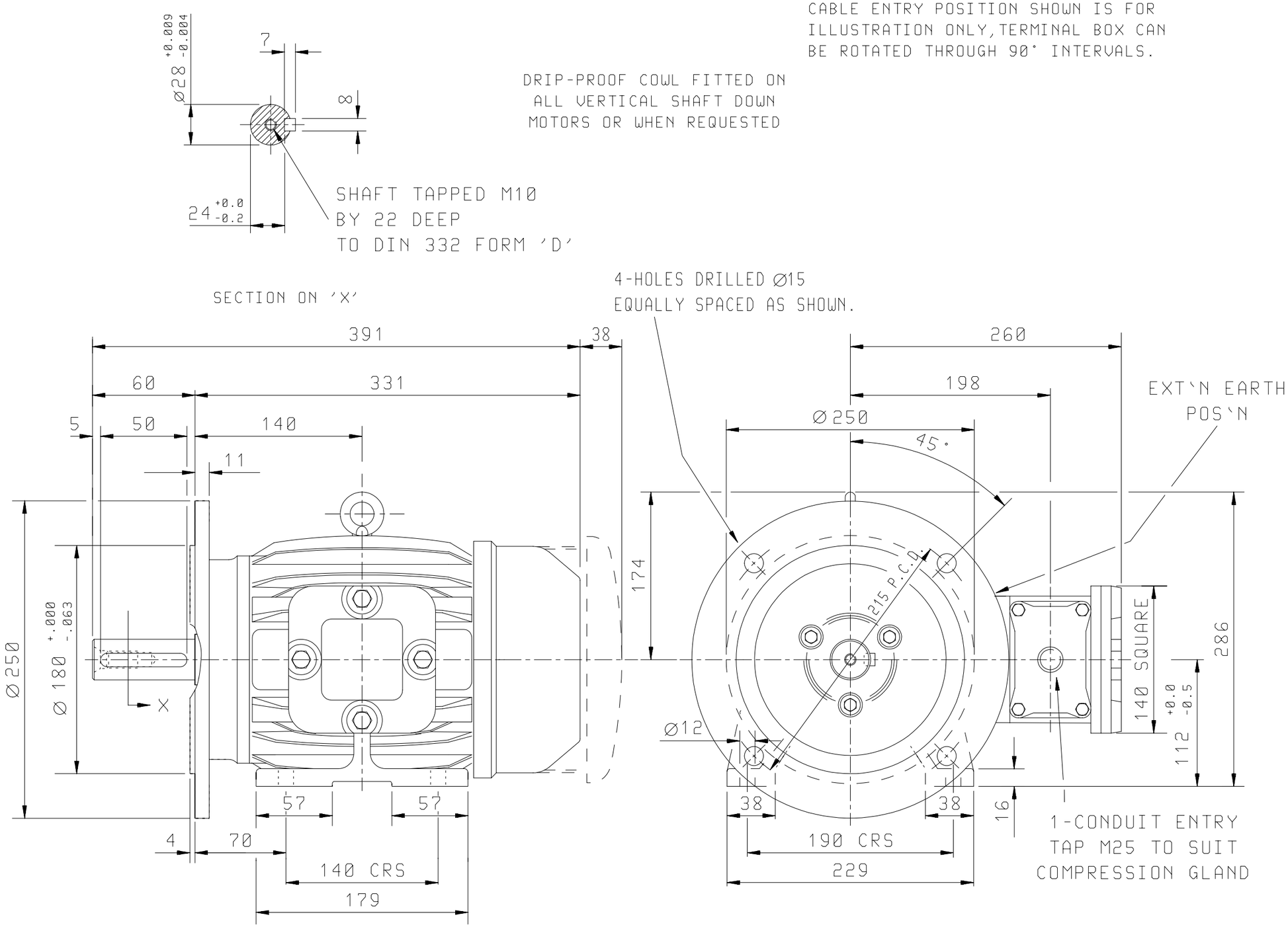

CUSTOMER		
ORDER No.		
PART No.		
OUR ORDER No.		
FRAME SIZE		
KW.	RPM.	
Hz	PHASE	
VOLTS	POLES	
BRGS.	DE.	NDE.
MOTOR NETT WT.		Kg.
SPECIAL REMARKS		

ALL DIMENSIONS IN MILLIMETRES.

FIRST ANGLE PROJECTION

BROOK CROMPTON

Huddersfield, HD1 3LJ
ENGLAND

SHEET SIZE	TITLE
A3	OUTLINE DIMENSION DRAWING 'W' FLAMEPROOF TOTALLY ENCLOSED FAN COOLED EExd 112M FRAME FLANGE WITH FEET MOUNTED MOTOR. GROUPS IIA & IIB

	NAME	DATE
DRAWN	V.L.S	26-03-03
CHECKED	R.R	26-03-03
SCALE	N.T.S	

DRG. No.	K12GD001/0		
DRG. REF.			
REVISION:		DATE	