DRG. No.	K12GF001/0
DRG. REF.	

CUSTOMER		
ORDER No.		
PART No.		
OUR ORDER No.		
FRAME SIZE		
KW.	RPM.	
Hz	PHASE	
VOLTS	POLES	
BRGS.	DE.	NDE.
MOTOR NETT WT.		Kg.
SPECIAL REMARKS		

CABLE ENTRY POSITION SHOWN IS FOR ILLUSTRATION ONLY, TERMINAL BOX CAN BE ROTATED THROUGH 90° INTERVALS.

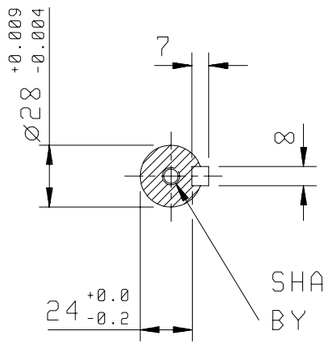

SHAFT TAPPED M10
BY 22 DEEP
TO DIN 332 FORM 'D'

SECTION ON 'X'

DRIP-PROOF COWL FITTED ON ALL VERTICAL SHAFT DOWN MOTORS & ALL MOTORS WITH CAST IRON FAN COVERS, OR WHEN REQUESTED.

EXTERNAL EARTH POSITION

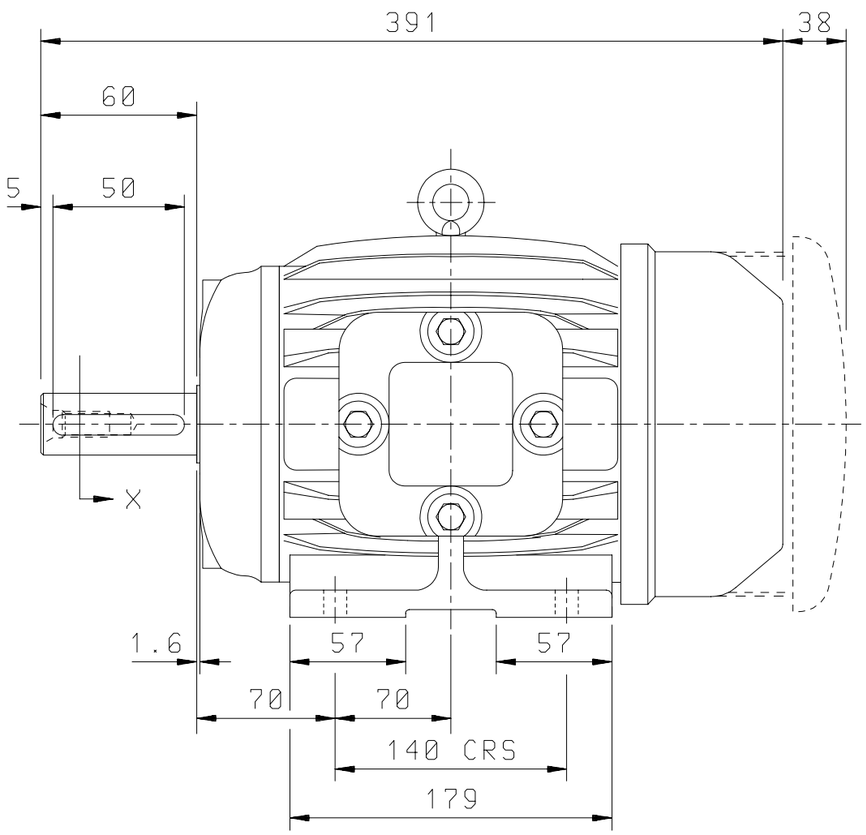

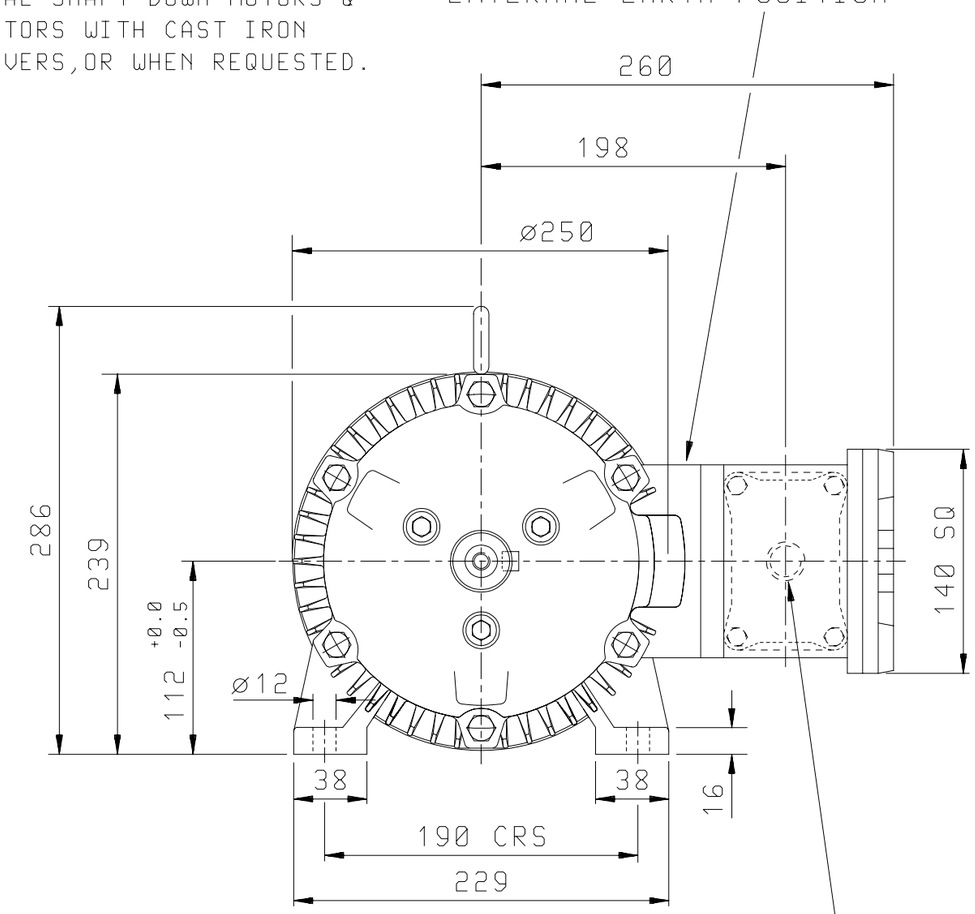

1 - CONDUIT ENTRY
TAPPED CM25 TO SUIT
COMPRESSION GLAND

ALL DIMENSIONS IN MILLIMETRES

FIRST ANGLE PROJECTION

BROOK CROMPTON

Huddersfield, HD1 3LJ
ENGLAND

SHEET SIZE	TITLE		NAME	DATE	DRG. No. K12GF001/0
A3	OUTLINE DIMENSION DRAWING 'W' FLAMEPROOF TOTALLY ENCLOSED FAN COOLED EExd 112M FRAME FOOT MOUNTED MOTOR. GROUPS IIA & IIB	DRAWN	RR	11/02/03	DRG. REF.
		CHECKED	DH	11/02/03	
		SCALE	N.T.S		REVISION: DATE