OUTLINE DIMENSION DRAWING FOR 3 PHASE SQUIRREL CAGE TEFC, CAST IRON FOOT WITH FACE MOUNTED INDUCTION MOTORS CONFORMING TO NEMA MG1-2006

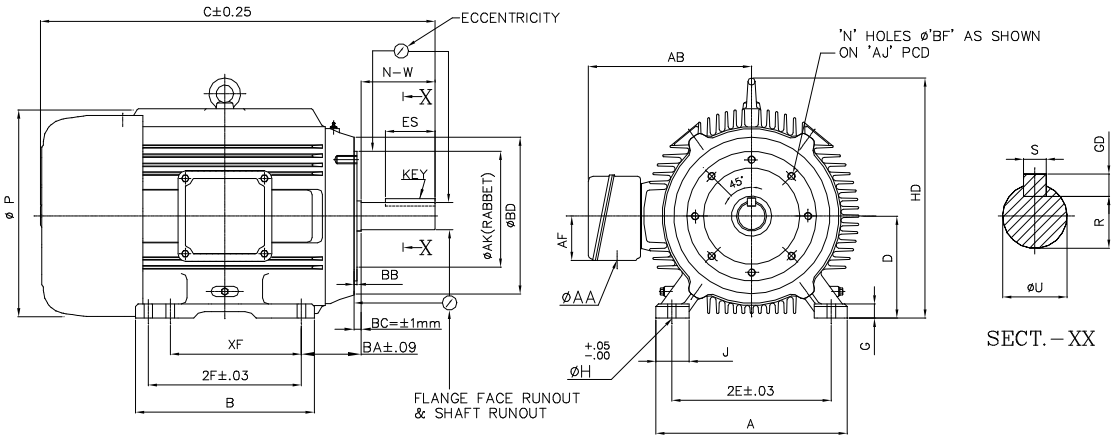

ALL DIMENSIONS ARE IN INCHES

FRAME	FACE FIXING						A	B	C	D	2E	2F	G	H	J	BA	P	HD	U	R	N-W	XF	KEY			AB	AF	AA
	AJ	AK	BBmax	BDmax	øBF	N																	S	GD	ES			
504TC	14	16.0	0.25	18.0	5/8-11	4	23.5	30.0	52.36	12.50	20.00	16.0	1.49	1.25	4.33	8.5	23.15	28.5	3.625	3.134	10.63	—	0.875	0.875	8.64	18.5	5.35	3

CUSTOMER:-	kW/(HP):-
P.O.No.:-	FRAME:-
ENQ./IND.No.:-	RPM:-
CONSULTANT/CLIENT:-	M/C.No.:-

	NAME	DATE
DRN.		6.3.08
CHD.		
APPD.		

BROOK CROMPTON

DRG. No.
NEMA 50430

SR. No.:01 REV. No.:00

MACHINE DIVN.3(A4-210x297)