OUTLINE DIMENSION DRAWING FOR 3 PHASE SQUIRREL CAGE TEFC, CAST IRON FOOT MOUNTED INDUCTION MOTORS CONFORMING TO NEMA MG1-2006

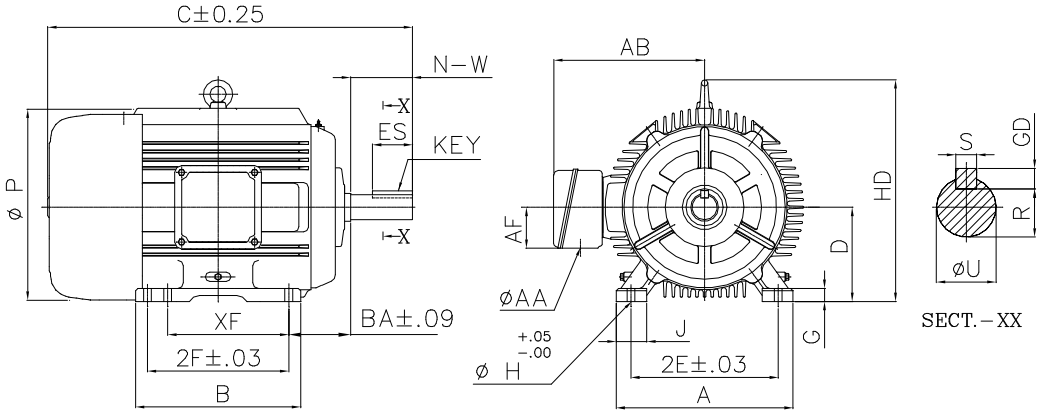

ALL DIMENSIONS ARE IN INCHES

FRAME	A	B	C	D	2E	2F	G	H	J	BA	P	HD	U	R	N-W	XF	KEY S	KEY GD	KEY ES	AB	AF	AA
326TS	15.0	14.0	32.2	8.00	12.50	12.00	1.00	0.66	2.6	5.25	16.85	18.9	1.875	1.591	3.75	10.50	0.500	0.500	2.03	13.19	2.83	2
326T			33.7										2.125	1.845	5.25				3.91			

CUSTOMER:-	kW/(HP):-
P.O.No.:-	FRAME:-
ENQ./IND.No.:-	RPM:-
CONSULTANT/CLIENT:-	M/C.No.:-

	NAME	DATE
DRN.		6.3.08
CHD.		
APPD.		

BROOK CROMPTON

DRG. No.
NEMA 32650

SR. No.:01 | REV. No.:00

MACHINE DIVN.3(A4-210x297)